DELTARACK™
transport & handling solutions

PATENT US 8726816 PATENT EU

SG60.4.120/2

Max. 500 kg - Weight 11 kg

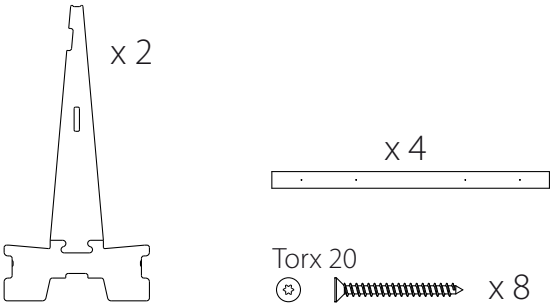

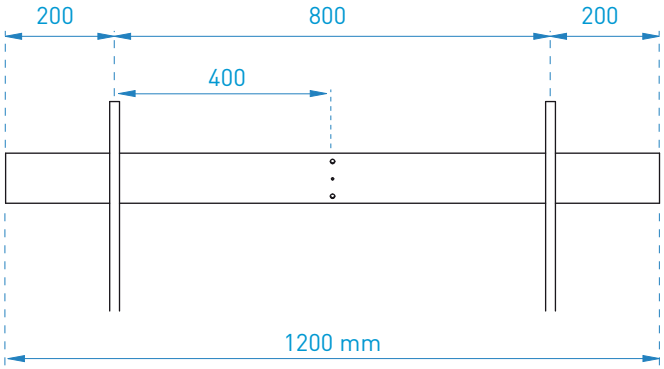

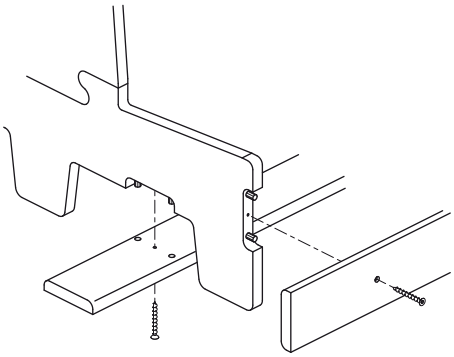

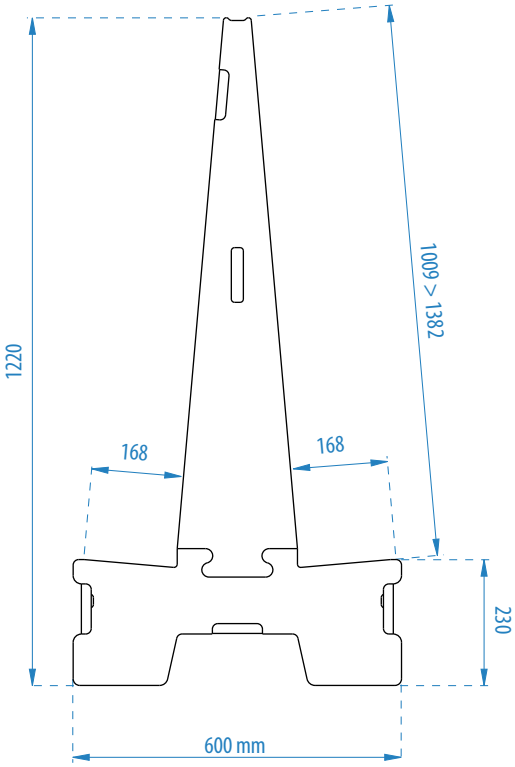

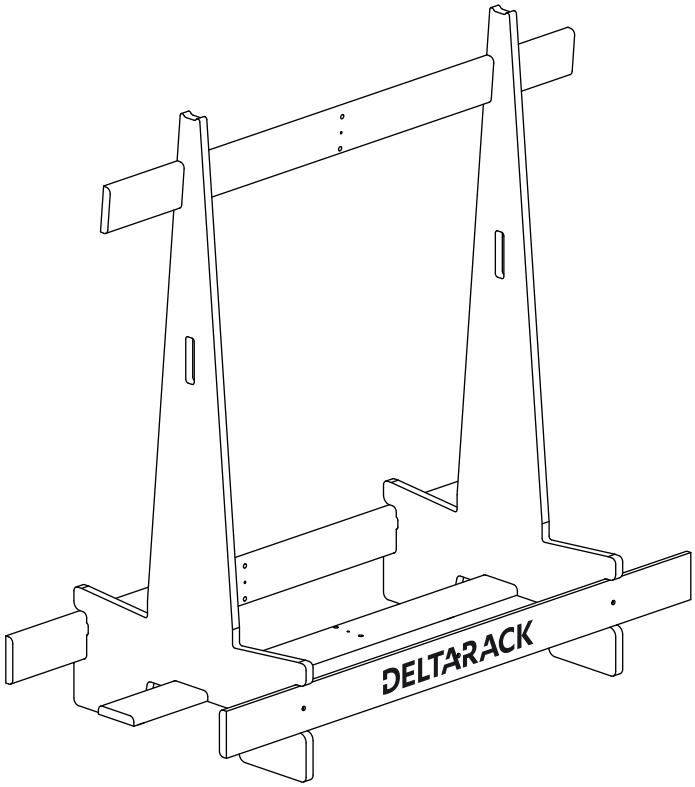

Safety regulations - Veiligheidsvoorschriften - Sicherheitsvorschriften - Norme di sicurezza - Normas de seguridad:

www.deltarack.com